WS-3500

Route & Return Wet Seal System

COMPOSITE PANEL INNOVATIONS

www.cpimetal.com

180 Bilmar Drive - Suite #2
Pittsburgh, PA 15205
Phone - (412) 919-0690
Fax - (412) 919-0689

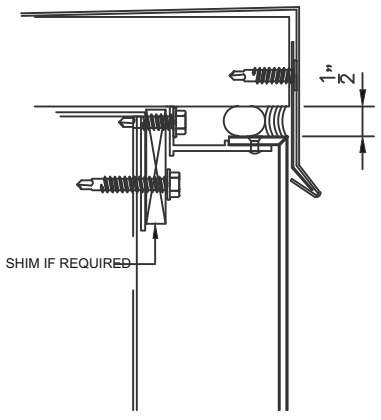

Extrusions Used

* #353 Extrusion

Parapet

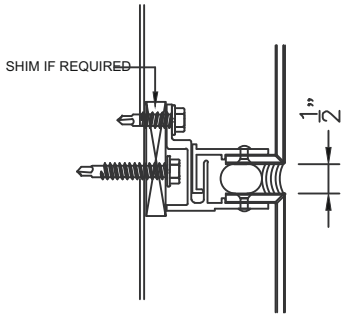

Extrusions Used

* #351 Extrusion
* #352 Extrusion

Typ. Panel Joint

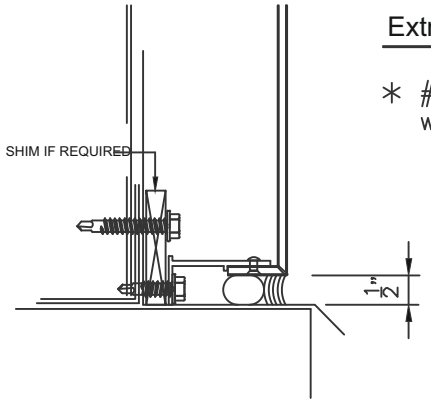

Extrusions Used

* #353 Extrusion with Drip

Base Termination

Wet Seal WS-3500

CPI's WS-3500 Wet Seal System consists of 4mm or 6mm aluminum composite panel material and incorporates a caulked joint reveal. It can be installed over a variety of substrates in flat, curved or complex shapes. Standard & fire-rated cores are available to meet ASTM E-84. The RS-5000 meets all of the following ASTM & AAMA Tests.

Performance Testing

* ASTM 283-04

  Standard test method for determining the rate of air leakage through exterior windows, curtain and doors under specified pressure difference across the specimen.

* ASTM 330-02

  Structural performance of exterior windows, doors, skylights and curtainwall by uniform static air pressure difference.

* ASTM 331-00

  Standard test method for water infiltration of exterior windows, curtainwall and doors by uniform static air pressure difference.

* AAMA 501.01-05

  Standard test method for water penetration of exterior windows, curtainwall and doors by dynamic pressure.

* TEST REPORTS AVAILABLE UPON REQUEST